LABOTRONICS

Flake Ice Maker

LB-20FIM

Index

Sr.no	Title	Page no
1.	Safety Measures	2
2.	Introduction	3
3.	Features	3
4.	Specifications	3
5.	Applications	3
6.	Instrument Introduction	4
7.	Operations	5
8.	Maintenance	6
9.	Troubleshooting	7
10.	Circuit Diagram	8

1. Safety Measures

1) The incline angle of the cabinet could not be over 45° during transportation.
2) Don't makethe ice maker upside-down in case the compressor or refrigerating system troubles occur.
3) The flake ice maker should be placed on the horizontal and structurally sound ground and away from the heat sources and corrosive gas.
4) At least about 150mm of room should be left around the ice maker to ensure fine ventilation.
5) Before using the flake ice maker for the first time you should wait 12 hours after positioning it in a proper place.
6) The rated capacity of the wire should be over 6A the section area of the wire is 75mm2.
7) The wire could consist of a single-ply or multiplies, and the rated current of the fuse is 5A.
8) A separate three-pole outlet should be used, and the grounding must be good.
9) This appliance is not intended for use by children or other persons without assistance or supervision if their physical, sensory, or mental capabilities prevent them from using it safely.
10) Children should be supervised to ensure that they do not play with the appliance.

2. Introduction

Flake ice maker LB-20FIM is a microprocessor controlled ice maker with air cooled refrigeration/condenser system and internal protection against over voltage and current. Features a slide away access door for easy user access. High quality stainless steel body ensures durability.

3. Features

1. Fully automated controller
2. Slide away access door
3. Stainless steel 304 exterior
4. Cooling mode - Air cooling
5. Optional voltage - 110 V; 60 Hz

4. Specifications

Model No.	LB-20FIM
Ice making capacity	200 kg / 24 hrs
Ice storage	60 kg
Power	1040 W
Refrigerant	R134a
Cooling type	Air cooling
Water supply	Tap water
Voltage	220 V; 50 Hz
Dimensions	680 x 740 x 1100 mm
Net weight	80 kgs
Gross weight	85 kgs

5. Applications

Uses in the chemical industry, concrete cooling, fish industry, cooling down blood and organs, wound chilling, food and drink industry etc.

6. Instrument Introduction

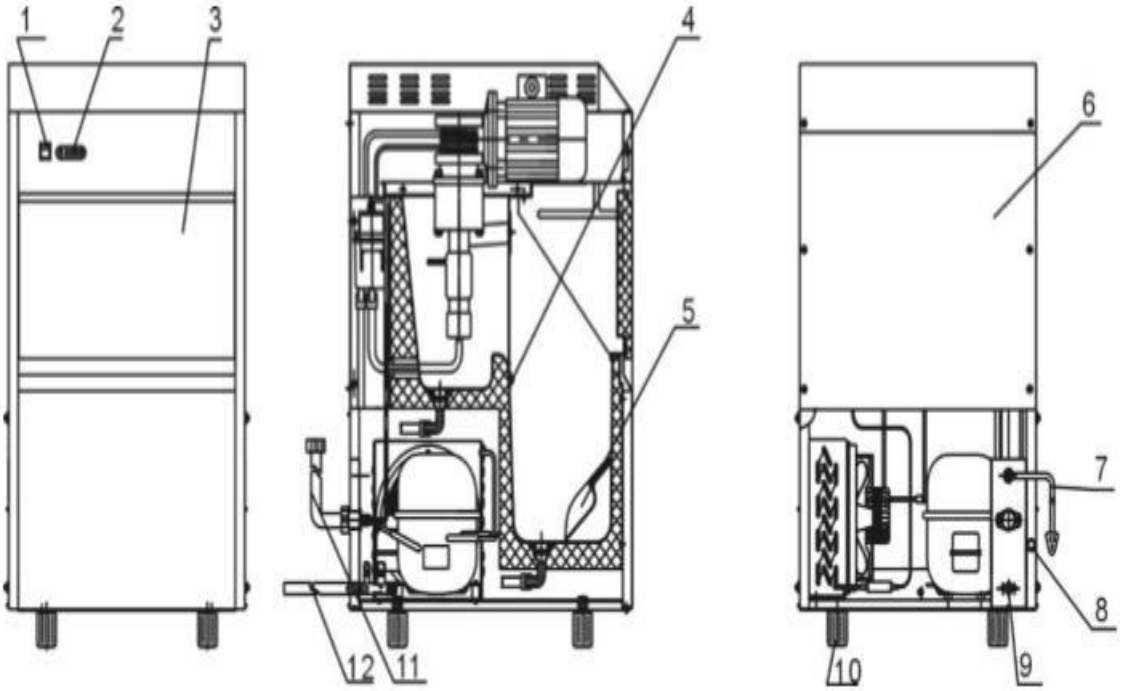

Figure.1

1. Switch
2. Operation board
3. Door
4. Temperature sensor
5. Ice shovel
6. Back panel
7. Power cable
8. Screw for drainage
9. Water outlet tube
10. Foot screw
11. Water inlet tube
12. Drainage tube

7. Operations

1) Unpack the package and take out the attached documents and spare parts such asthe water inlet and outlet tubes, ice shovel gaskets, etc.
2) Position the ice maker in a well-ventilated place and leave at least 150mm of roombetween the ice maker and the wall. Be sure the ice maker is positioned levelly andaway from the heat source.
3) Make one end of the φ12 flexible plastic corrugated pipe (supplied with the maker)connected with the water outlet tube on the back of the maker another pipe end should be placed in a container for surplus water (prepared by the user himself) orin the sewer.
4) Make one end of the water inlet tube (supplied by the maker) connected with the 3/4" screw-type connector of the water tap to get the drinkable tap water. The waterpressure of the water supply pipe is 1.5～3 bar.
5) The other end of the water inlet tube should relate to the screw-type connector of the water valve on the back of the ice maker. Be sure to put gaskets (supplied by themaker) in both ends of the water inlet tube before connecting.
6) If it is an ice maker for purified water a φ12 corrugated pipe (supplied with the maker) should be used to connect one end of the pipe with the purified water supplier (desk-top water dispenser) and another end with a water valve connectoron the back of the ice maker and the desk-top water dispenser should be placed onthe ice maker at the back position.
7) Make a poser connection and press the Start button on the operation board for about 4 seconds till the run indicator and the big ice indicator (or small ice indicator) light ON then the maker begins to work.
8) All procedures include water inlet → ice making ice → ice dropping → ice storing is controlled automatically for ice making continuously and if the ice is full in the ice storage container the ice full indicator on the operation board will light ON and theice maker will stop automatically, if there is a water shortage or something wrong with the water supply system the water shortage indicator lights ON and the ice maker will stop operation automatically.

8. Maintenance

1) If the compressor stops for any reason like water shortage, or too much ice, powerOFF don't restart it right away. Users can restart it about 5 minutes later.
2) Regularly check the connectors of the water inlet and outlet tubes and drain the littlesurplus water that may leak.
3) If the ice maker will be unused for a long period, screw off the plastic drainage connector screw on the back of the ice maker to drain the surplus water in the water groove then screw it on and wipe the inner liner of the ice storage container with a clean rag.
4) When plugging or unplugging the plug should be held by hand and the wires shouldnot be dragged heavily.

9. Troubleshooting

Trouble	Cause	Solution
The flake ice maker doesnot work	The voltage is lower thanthe limitation	Stop the ice maker and restart it until the voltage is normal.
	The ambient temperatureis too low (lower than 10 °C)	Try again when the ambient temperature is higher than 10 °C
Water shortage indicatorlight **ON**	Water shortage from thewater supply system	Check the water supply fit is OK restart the instrument.
	Water valve damage	Check the water valve
	Tap water pressure too low	Make sure the tap water pressure is higher than 1.5 bar
The compressor does notwork	Water shortage	Check the water supply system (water valve and water supply tube)
	Ice full	Take off some ice
The compressor works butice is not made	Refrigerant leakage	Recharge the refrigerantand check the leakage again
	The refrigerating system isblocked	Charging N_2 to check whether the system is blocked and replace thefilter.
		Check whether the fan is running.
The water shortage indicator and ice full indicator are glittering atthe same time.	If the water inlet or running fails because of low environmental temperature.	Stop the instrument untilthe temperature reaches 10°C.
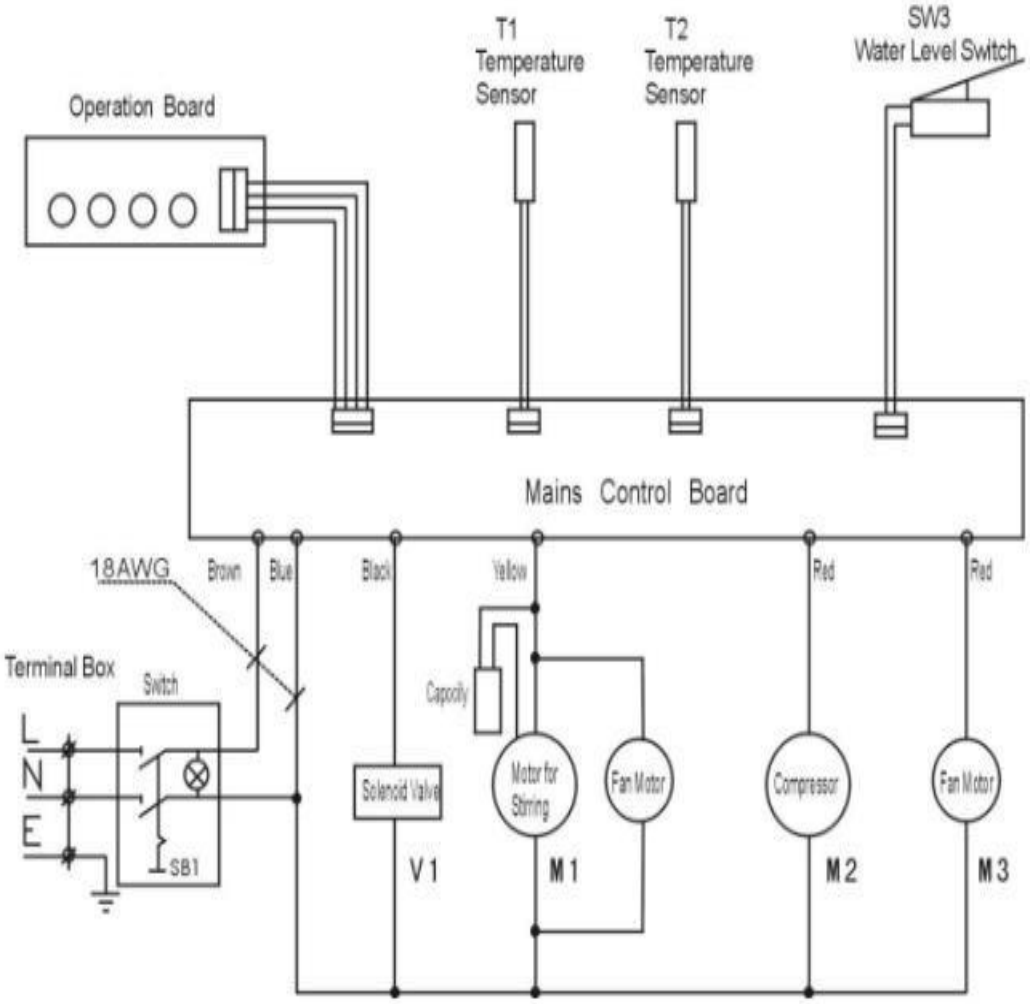
10. Circuit Diagram